JUNO

6" PAR36 LOW VOLTAGE HOUSING

50W PAR36

TC46

Project:

Fixture Type:

Location:

Contact/Phone:

PRODUCT DESCRIPTION

TC Housing designed for use in non-insulated areas • If installed where insulation is present, the insulation must be pulled back 3" from all sides of the TC housing.

PRODUCT SPECIFICATIONS

Lamp 25/36/50W PAR36 12V.

Socket Leads supplied with spade connectors for screw terminal PAR36 lamps.

Trims Trim selection shown on reverse.

Transformer 120V to 12V 50VA thermally protected magnetic transformer mounted to junction box.

Dimming May be dimmed using dimmers specifically designed for Low Voltage magnetic transformers (consult factory or dimmer manufacturer for additional information).

Labels UL listed for through-branch wiring, damp locations and IP • Product thermally protected against improper use of insulation • Union made • UL Listed/CSA certified.

Testing All reports are based on published industry procedures; field performance may differ from laboratory performance.

Specifications subject to change without notice.

INSTALLATION

Real Nail 3 Bar Hangers Telescoping, Patented (US Patent D552,969) Real Nail 3 system permits quick placement of housing anywhere within 24" O.C. joists or suspended ceilings • Integral T-bar notch and clip secures housing in suspended ceiling grid – no accessory clips required • 24" expansion stop allows quick placement of fixture in standard grid spacing • Bars scored in two locations for fast, clean breaking, allowing housing installation in tight applications • Bars captive to mounting frame • Edge-mounted for extra strength • Captive bugle-headed ring shank nail for quick one-step installation and easy removal with claw hammer for fixture relocation • Quick-Loc slot (location identified on the mounting frame) and oversized locking set screw lock fixture in position • Bar hanger foot contoured to align to bottom of construction joist • Alternate mounting holes included.

Junction Box Pre-wired junction box provided with (5) ½" and (1) ¾" knockouts, (4) Non-metallic sheathed cable connectors and ground wire, UL listed/CSA certified for through-branch wiring, maximum 8 No. 12 AWG 90° C branch circuit conductors (4 in, 4 out) • Junction box provided with removable access plates • Knockouts equipped with pryout slots.

Mounting Frame 22-gauge die-formed galvanized steel mounting frame • Rough-in section (junction box, mounting frame, housing transformer and bar hangers) fully assembled for ease of installation • Sight lines embossed on mounting frame to allow for easy viewing when aligning fixtures.

Housing TC housing, 22-gauge white painted steel • Housing is vertically adjustable to accommodate up to a 2" ceiling thickness.

DIMENSIONS

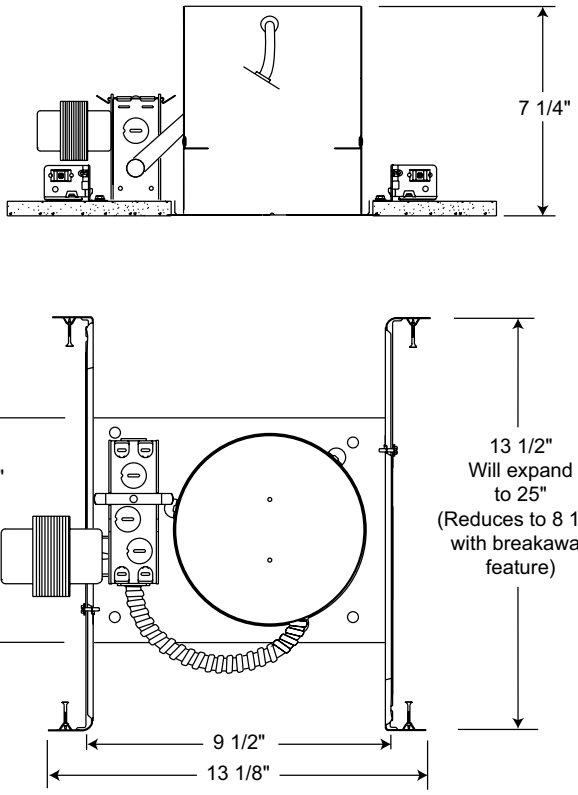

6 7/8" CEILING CUTOUT

PRODUCT CODES

Catalog Number		Input Voltage	Lamp Rating
TC46	4" Low Voltage New Construction Non-IC	120V	12V 50W PAR36

Housing and trim can be ordered together or separate, but will always ship separately.

Printed in U.S.A. ©2017 Acuity Brands Lighting, Inc. Rev. 03/01/17

6" PAR36 LOW VOLTAGE HOUSING

50W PAR36

TC46

TRIMS/ LAMPS

	Cat. No.	Description	Lamp Rating
	**464 BWH**	6" Adjustable Downlight Baffle Trim - Black Baffle, White Trim Ring	50W PAR36 12V
	464 WWH	6" Adjustable Downlight Baffle Trim - White Baffle, White Trim Ring	
	**467 CWH**	6" Adjustable Downlight Cone Trim - Clear Alzak® Cone, White Trim Ring	50W PAR36 12V

Trim Size: 7 5/8" O.D.
Alzak is a registered trademark of Alcoa Corp.
Note: In Canada when insulation is present, Type IC fixtures must be used.
Each trim functions as a downlight or adjustable.

 ©2017 Acuity Brands Lighting, Inc.