Designer Wall Box Dimmer

Single Pole (One location) or 3-Way (Multi-location)

120VAC, 60Hz

Electronic Low-Voltage

Cat. No. ISD 400 ELV (Lighted)

Rated: 400VA

INSTALLATION INSTRUCTIONS

Synergy® LIGHTING CONTROLS

1335 Industrial Boulevard, Conyers GA 30012
Phone: 800-533-2719 www.synergylightingcontrols.com

GUARANTEE

Synergy Lighting Controls warrants all equipment to be free from defects in manufacturing, under normal and proper storage, installation, and use, for a period of two years. Our guarantee liability extends only to the repair or replacement of the defective part and no labor charges for correction of the defect by repair or replacement will be honored by Synergy Lighting Controls unless prior written authority has been granted by our Customer Service Department.

For Technical Assistance Call:
1-800-533-2719
www.synergylightingcontrols.com

Synergy® LIGHTING CONTROLS

An AcuityBrands Company

DI-40X-IPE04-00A

FEATURES

- Minimum Brightness Adjustment
- Large ON/OFF switch
- Color conversion available
- ON/OFF LED indicates status of load

INSTALLATION INSTRUCTIONS

WARNING: TO BE INSTALLED AND/OR USED IN ACCORDANCE WITH APPROPRIATE ELECTRICAL CODES AND REGULATIONS.

WARNING: IF YOU ARE NOT SURE ABOUT ANY PART OF THESE INSTRUCTIONS, CONTACT LITHONIA CONTROLS AT 1-800-533-2719.

WARNING: TO AVOID OVERHEATING AND POSSIBLE DAMAGE TO THIS DEVICE AND OTHER EQUIPMENT, DO NOT INSTALL TO CONTROL A RECEPTACLE, FLUORESCENT LIGHTING, A MOTOR- OR A TRANSFORMER-OPERATED APPLIANCE OTHER THAN APPROPRIATE LOW-VOLTAGE LIGHTING.

CAUTION (For Electronic Low-Voltage Only):

1. USE WITH ELECTRONIC LOW-VOLTAGE TRANSFORMERS ONLY. **DO NO**T USE TO CONTROL A MAGNETIC LOW-VOLTAGE TRANSFORMER. USE A LITHONIA MAGNETIC LOW-VOLTAGE DIMMER TO CONTROL MAGNETIC LOW-VOLTAGE TRANSFORMERS.
2. THIS DIMMER PROVIDES PROTECTION FROM OVERHEATING. AN EXCESSIVE LOAD APPLIED TO THE DIMMER WILL CAUSE THE DIMMER TO OVERHEAT. THE EXCESS LOAD MUST BE REMOVED TO RESUME PROPER OPERATION.

OTHER CAUTIONS:

1. USE ONLY ONE (1) DIMMER PER LOAD. THE SWITCH(ES) WILL TURN THE LIGHT ON AT THE BRIGHTNESS LEVEL SELECTED AT THE DIMMER.
2. DISCONNECT POWER WHEN SERVICING FIXTURE OR CHANGING LAMPS.
3. USE THIS DEVICE ONLY WITH COPPER OR COPPER CLAD WIRE. WITH ALUMINUM WIRE USE ONLY DEVICES MARKED CO/ALR OR CU/AL.

MULTI-GANG INSTALLATION:

When ganging dimmers, the side sections of the mounting strap must be removed. Use pliers to carefully bend side sections back and forth until they break off **(see Figure 1)**. The side sections dissipate heat, so removing them requires a derating of the dimmer's capacity **(see chart)**.

MAXIMUM LOAD PER CONTROL FOR MULTI-GANG			
Cat. No.	Single	Two Gang	More than 2 Gang
ISD 400 ELV	400VA	350VA	250VA

MAXIMUM BULB WATTAGE (For Electronic Low-Voltage Only):

Low-voltage dimmers are rated in Volt-Amps (VA). The maximum bulb wattage is determined by the efficiency of the transformer in the low-voltage lighting system. Transformer efficiencies will vary from different manufacturers; consider 90% efficient as average. Use the chart to determine maximum bulb wattage for typical transformer efficiency ratings.

MAXIMUM BULB WATTAGE AT 90% EFFICIENCY			
Rating	Single	Two Gang	More than 2 Gang
400VA	360W	315W	225W

TO INSTALL:

1. **WARNING:** TO AVOID FIRE, SHOCK, OR DEATH; TURN OFF POWER AT CIRCUIT BREAKER OR FUSE AND TEST THAT POWER IS OFF BEFORE WIRING!
2. Remove existing wallplate and switch, if applicable.
3. Remove 3/4" (1.9 cm) of insulation from each circuit conductor. Make sure the ends of wires are straight.
4. Connect wires per appropriate WIRING DIAGRAM as follows: **WARNING: CONNECT AN ELECTRONIC LOW-VOLTAGE DIMMER ONLY TO THE PRIMARY (HIGH-VOLTAGE) SIDE OF AN ELECTRONIC LOW-VOLTAGE TRANSFORMER. NOTE: Common terminal of 3-Way Switch is usually labeled and/or BLACK.** Twist dimmer leads together with circuit conductors and push firmly into appropriate wire connector. Screw connectors on clockwise making sure no bare wires show below the wire connectors. Secure each connector with electrical tape.

   NOTE: For single pole applications, cap one BLACK lead with an appropriate size wire connector. Secure connector with electrical tape.

Figure 1 - Dimmer Functions

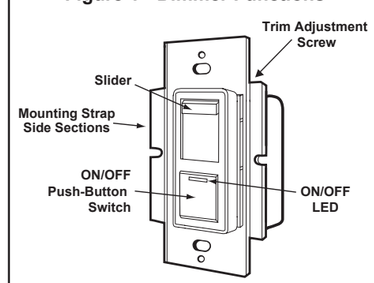

NOTE: This model incorporates a trim adjustment which will allow the installer to precisely set the low end of the dimming range to suit each installation. This adjustment is preset at the factory and should require no further adjustments for most installations. If adjustment is required proceed as follows, otherwise continue with step 8:

5. Restore power at circuit breaker or fuse. Press the ON/OFF push-button switch several times **(see Figure 1)**. The GREEN LED will turn ON and OFF indicating power to the switch. Position the slider to the minimum brightness level (bottom of stroke).
6. The brightness adjustment is located at the top of the dimmer back cover **(see Figure 1)**. Using a small, insulated screwdriver, rotate the trim adjustment until the desired level of minimum brightness is obtained.
7. Check for proper operation by raising the slider to it's maximum position and returning to minimum (bottom of stroke). If operation is not satisfactory, repeat step 6. When the brightness level is adjusted to satisfaction, **TURN OFF POWER**.
8. Installation may now be completed by carefully positioning all wires to provide room in outlet box for dimmer. Mount dimmer into box with mounting screws supplied. Attach wallplate.
9. Restore power at circuit breaker or fuse. **INSTALLATION IS COMPLETE.**

COLOR CONVERSION PROCEDURE

The color of this device can be changed to suit your interior design requirements. Simply obtain a color conversion kit of the appropriate color from your Lithonia distributor and proceed as follows (please note that wallplate must be removed).

1. Select the color of the face you desire.
2. The frame has snaps on its sides. Using your fingers, grip around the frame and push on one side to release it from the strap **(see Figure 2)**.
3. Take the new frame and position it properly to the strap. Line up the plastic snaps with the square holes in the strap. Insert the snaps on one side of the frame into the strap.
4. Firmly press sideways and down to slip the other snaps into place. The frame snaps in with a audible click. Ensure that all four snaps are secure.
5. Moving the slider up or down will automatically engage the slider control mechanism. Replace wallplate. **The color conversion is complete.**

TO OPERATE

- GREEN LED will remain ON when the lights are OFF
  - Facilitates access to switch in the dark.
- Depress push-button switch to ON position
  - Lights will turn ON (GREEN LED will turn OFF).
- Move slider - Lights will brighten or dim to level set.
- Depress push-button switch to OFF position
  - Lights will turn OFF (GREEN LED will turn ON).
- Lights will turn ON at set brightness level (from either switch location in a 3-way installation).

TROUBLESHOOTING

- Light does not turn ON and ON/OFF LED does not turn ON
  - Circuit breaker or fuse has tripped.
  - Lamp is burned out.
  - Lamp is not connected to line Neutral.
- Lights Flickering
  - Lamp has a bad connection.
  - Wires not secured firmly with wire connectors.

DI-40X-IPE04-00A

Figure 2 - Color Conversion

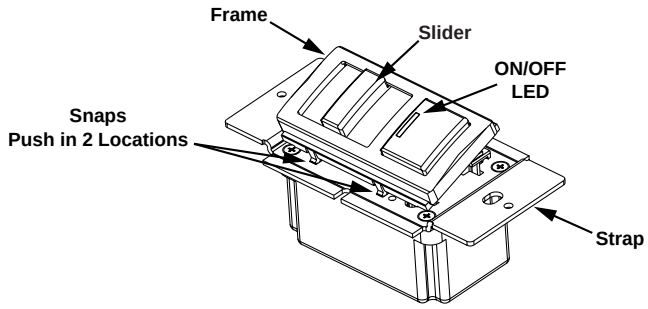

Wiring Diagram 1 - Single Location Control Application

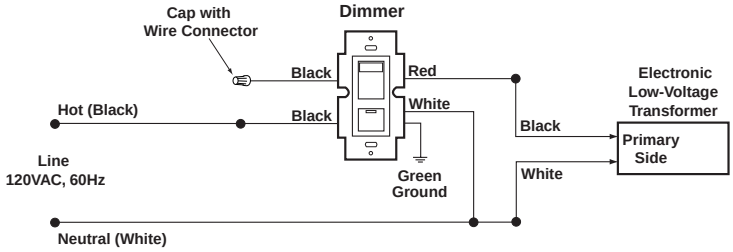

Wiring Diagram 2 - Two Location Control Application

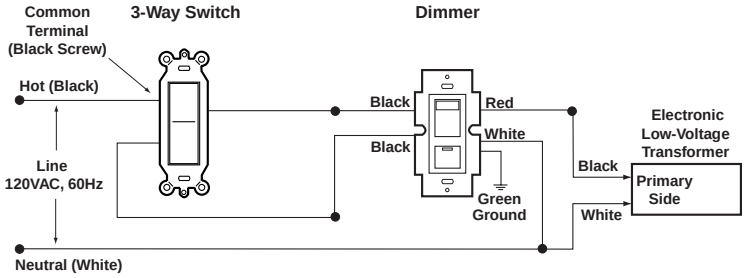

Wiring Diagram 3 - Three Location Control Application

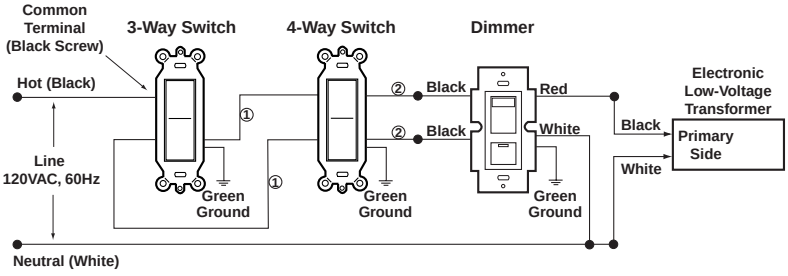

① Travelers between switches "IN"
② Travelers between switches "OUT"